DE

WASSERWERK
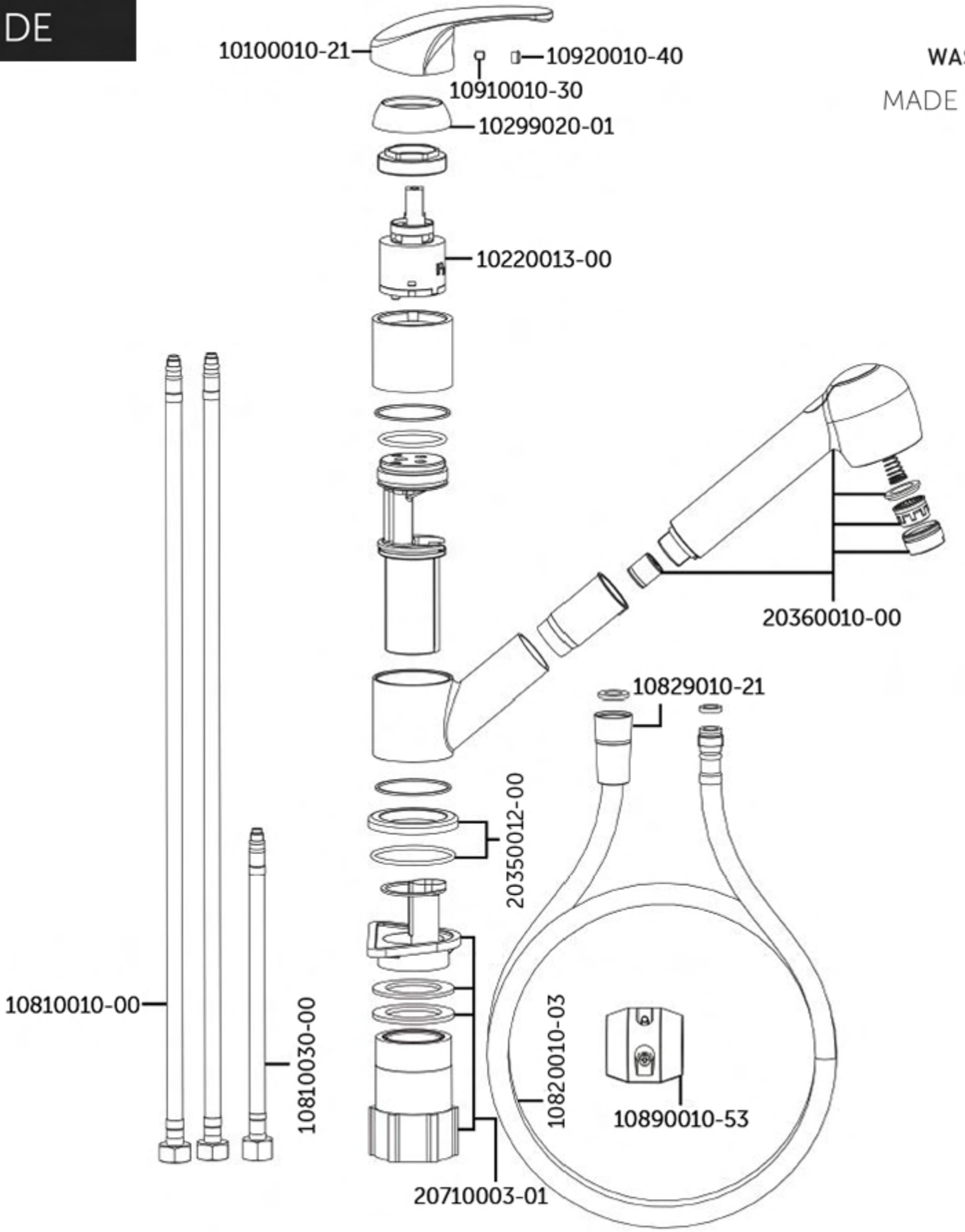
MADE IN GERMANY